Instruction Manual

Low Profile Lift Table

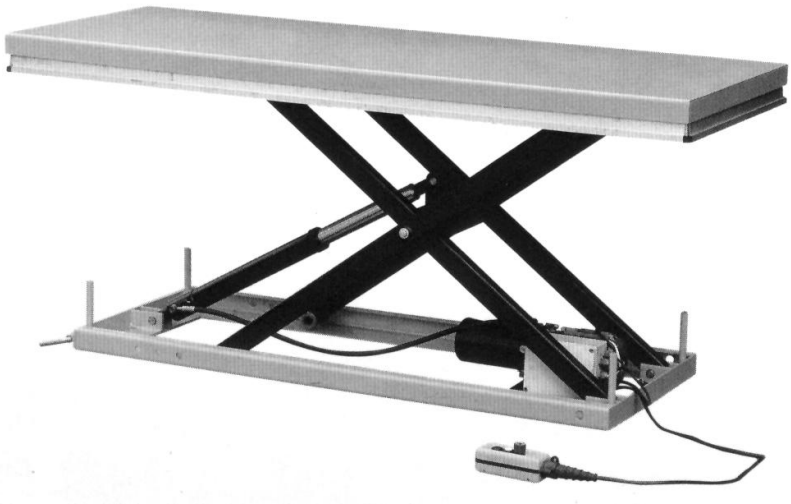

HW500L

Note: Owner/Operator must read and understand this instruction Manual before using the low profile lift table

THANK YOU VERY MUCH FOR SELECTING OUR PRODUCT. THIS INSTRUCTION MANUAL DESCRIBES CORRECT OPERATING METHOD TO ENSURE PROLONGED SERVICE LIFE. PLEASE READ AND COMPLETELY UNDERSTAND THIS MANUAL BEFORE OPERATING THE LOW PROFILE LIFT TABLE. ALWAYS KEEP THIS MANUAL AT AN APPROPRIATE PLACE. IF THE MANUAL OR WARNING DECAL IS MISSING, PLEASE CONTACT WITH DEALER.

Note: This Manual has been prepared for skilled and competent personal. It provides instructions for using the product correctly and parts list. This Manual cannot replace the professional skills and expertise of the user.

1.



WARNING! *If operating the lift table improperly, a person may be seriously injured. Therefore, operate properly according to the following instruction*

◇ Read & thoroughly understand the Instruction Manual completely before using. Follow all safety instructions strictly.

◇ It is necessary to check all safety devices before operation.

◇ Make sure that there are no obstacles in the working area.

◇ Do not put foot or hand in scissors mechanism or through frame.

◇ Screw the lifting eyes on the base frame before working on the lift table.

◇ Do not overload the lift table. Load should be distributed on the table according to relevant load distribution chart.

◇ Pay attention if local voltage and frequency is as same as the input specification of the lift table.

◇ Use the lift table on flat and solid ground.

◇ All the electrical connection and disconnection operations must be carried out by skilled and competent personal.

◇ While operation, it is forbidden to contact the moving parts of the lift table.

◇ While the lift table moving, it is forbidden to adjust or to move the load.

◇ It is forbidden to lift the load, which perhaps does harm to a person or other object.

◇ It is forbidden to operate the lift table while a person is under the table.

◇ Do not adjust the safety valve of hydraulic power pack.

◇ It is forbidden to operate the lift table even if there is small structure distortion.

◇ Do not use in an explosive or flammable place.

Note！Maximum load refers to the load being uniformly distributed over the entire platform area.

In accordance with **EN1570,**Safety Requirements for Lifting Tables，the basic requirements are:

Ⅰ 100% of the rated load(maximum load) uniformly distributed over the entire platform area.

Ⅱ or 50% of the rated load(maximum load) uniformly distributed over half the length of the platform.

Ⅲ or 33% of the rated load(maximum load) uniformly distributed over half the width of the platform.

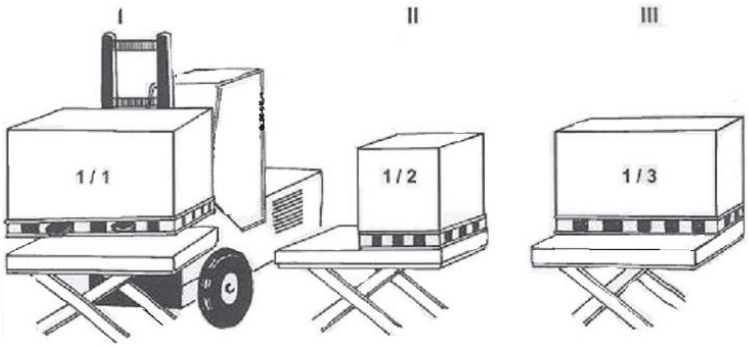

2. INSTALLATION OF LIFT TABLE ON THE FLOOR/GROUND OR IN A PIT



Double or triple vertical scissors tables must be fixed to the floor/ground by means of expander bolts or similar，We also recommend that all other lift table types，with the exception of mobile units，are securely affixed on the floor to Prevent unintentional movement

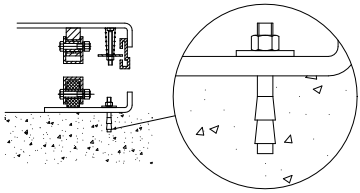

Mechanical/electrical installation

1.The base frame of the lift table is not as standard self -supporting .It is important that the flooring is flat and stable and that the installation area or pit, when necessary, is well drained.

2. Utilize a lifting sling through the scissor package. Tie the base frame to the platform or the scissor mechanism. Locate the table into the desired position. Turn the fixed arm end to the side where the load will be moved on or off at upper level. See picture below.

3. Check the operation of the safety frame on all sides.

4.The control device should be positioned so that the operator has a clear view over the lift table and the load at all times when the lift is operated.

Loading/unloading at the fixed arm end

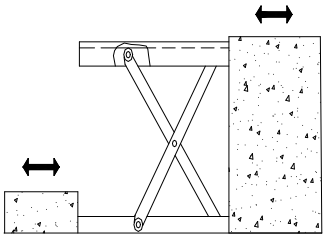

Pit drawing

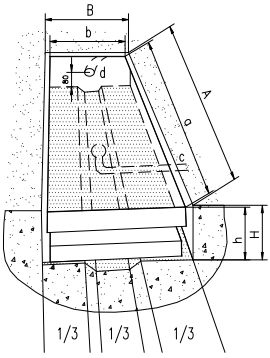

A. Pit length=a+30mm

B. Pit width=b+30mm

H. Pit depth=closed height of table+5mm

a. Platform length

b. Platform width

c. Drainage hole (when required)

d. Tube for external cables and hoses Φ60mm

h. Lowest height

3.



CAUTION! *If operating the lift table improperly, a person may be injured. Therefore, operate properly according to the following instruction.*

◇ The lift table is a movable lifter designed to lift or lower rated load. Do not use it for other purpose.

◇ Do not allow a person to operate the lift table, who does not understand its operation.

◇ It is forbidden to change the lift table without manufacturer's written admission.

◇ It is necessary to use the spare parts designated by manufacturer.

◇ Make sure to keep a distance between the table and ambient objects enough to operate the lift table safely.

◇ Keep the hydraulic system under clean and safe condition.

◇ The hydraulic power pack features an electric lowering control. The coils must be fed with the required voltage as described on those coils. The power supply voltage should not exceed ±10% of the rated required voltage.

◇ Always do maintenance and routine check while the lift table is unloaded.

◇ The lift table is not waterproof and should be used in a dry environment.

4. DAILY INSPECTION

Daily inspection is effective to find the malfunction or fault on the lift table. Before operation, check the lift table according to the following points.

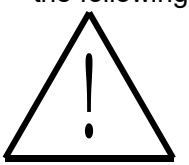

CAUTION! *Do not use the lift table if any malfunction or fault is found.*

◇ Check all the terms of WARNING and CAUTION.
◇ Check scratches, bending or crack on the lift table.
◇ Check smooth movement of the table.
◇ Check if there is any hydraulic oil leakage.
◇ Check the vertical creep of the table.
◇ Check if all the bolts and nuts are firmly tightened.

5. OPERATING THE LIFT TABLE

■ LOADING

The maximum capacity of the lift table is 1000kg. Load should be distributed on the lift table equably.

■ Lifting the Table



CAUTION! *Do not overload the lift table. Ensure the balance of loading. Do not load partially or concentrically.*

◇ Screw and loose emergency stop switch.

◇ Push the UP button and power pack starts to work to lift the load.

◇ Loose the UP button and power pack stops working.

■ LOWERING THE TABLE



WARNING! *Do not put foot or hand in scissors mechanism.*

◇ Push the DOWN button and the table will lower.

◇ Loose the DOWN button and the table will stop.

NOTE

◇ The table is equipped with an aluminum guard to avoid accidental danger.

◇ If aluminum guard strikes an object while the table lowers, stop operation and check the lift table. After making sure no any abnormality, strike the UP button slightly and then the electric

system will function as before.

■ EMERGENCY STOP

There are two methods of emergency stop as follows.

◇ Push down the emergency stop switch and the movement of table stops.

◇ Strike aluminum guard upward and the movement of table also stops.

■ TRANSPORTATION

If necessary, the lift table can be transported with attached ringbolts.

◇ Pay attention to the maximum capacity of lifting equipment to be used.

◇ Keep the ringbolts with reasonableness.

■ MOTOR WORKING TIME

◇ Motor hours of work in one hour less than nine minutes.

6. HYDRAULIC CIRCUIT & ELECTRIC PRINCIPLE DIAGRAM

See Figure 1 & Figure 2.

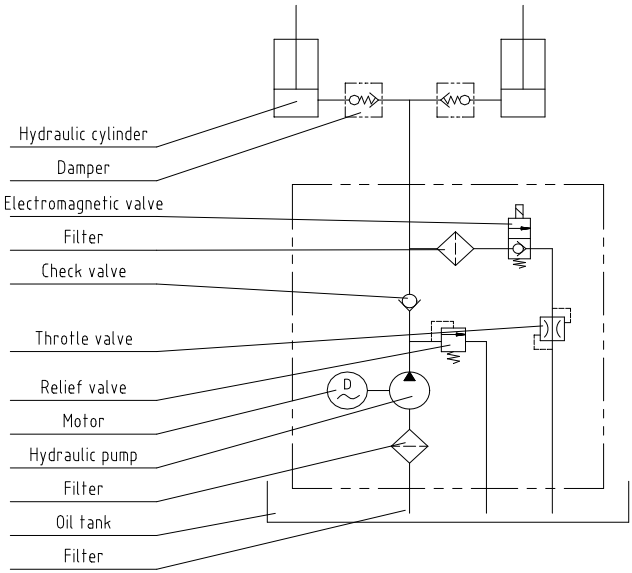

Fig. 1 Hydraulic circuit

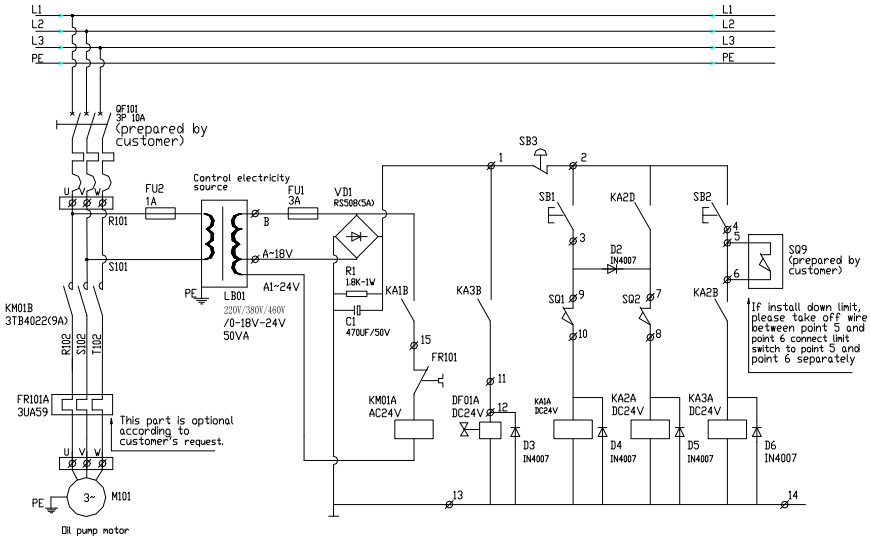

No	Type	Name	Description	Qty
1	LB01	Control electricity source transformer	JBK3-220V/0-18V-24V 50VA JBK3-380V/0-18V-24V 50VA JBK3-460V/0-18V-24V 50VA	1
2	F1	Fast melter	3A	1
3	F2	Fast melter	1A	
4	VD1	Whole bridge silicon rectifier	RS-507 5A	1
5	R1	Resistor	1.8K/1W	1
6	C1	Electrolysis capacitor	470uF/50V	1
7	KM01	AC contactor	3TB4022	1
8	KA1 KA2 KA3	Middle relay	SRC-24VDC-SH	3
9	D2 D3 D4 D5 D6	Silicon commute diode	IN4007	5
10	DF01	Oil pump solenoid valve	DC24V	1
11	SB3	Emergency stop button	XB2-ES542C+ZB-BY9101	1
12	SB2	Down button	XB2-BA21C	1
13	SB1	Up button	XB2-BA21C	1
14	SQ1	Up limit switch	D4V-8108Z	1
15	SQ2	Protection switch		2
16	SQ9	Down limit switch	D4V-8108Z(Prepared by customer)	1
17	M101	Oil pump motor		1
18	QF101	Breaker	C45N 3P 25A(Prepared by customer)	1
19	FR101	Hot relay（3UA59）	This pare is optional according to customer’s request	1

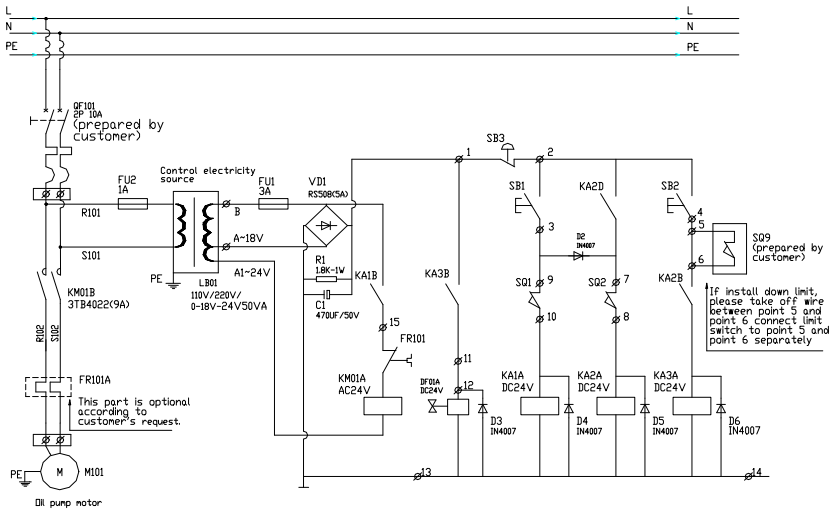

No	Type	Name	Description	Qty
1	LB01	Control electricity source transformer	JBK3-110V/0-18V-24V 50VA JBK3-220V/0-18V-24V 50VA	1
2	F1	Fast melter	3A	1
3	F2	Fast melter	1A	
4	VD1	Whole bridge silicon rectifier	RS-507 5A	1
5	R1	Resistor	1.8K/1W	1
6	C1	Electrolysis capacitor	470uF/50V	1
7	KM01	AC contactor	3TB4022	1
8	KA1 KA2 KA3	Middle relay	SRC-24VDC-SH	3
9	D2 D3 D4 D5 D6	Silicon commute diode	IN4007	5
10	DF01	Oil pump solenoid valve	DC24V	1
11	SB3	Emergency stop button	XB2-ES542C+ZB-BY9101	1
12	SB2	Down button	XB2-BA21C	1
13	SB1	Up button	XB2-BA21C	1
14	SQ1	Up limit switch	D4V-8108Z	1
15	SQ2	Protection switch		2
16	SQ9	Down limit switch	D4V-8108Z(Prepared by customer)	1
17	M101	Oil pump motor		1
18	QF101	Breaker	C45N 2P 25A(Prepared by customer)	1
19	FR101	Hot relay	This pare is optional according to customer's request	1

Fig. 2 Electric Principle Diagram

7. SERVICE INSTRUCTIONS

■ Do routine check of fasteners, packing and oil leaking.

■ Do routine check of the function of the lift table.

■ Before service the lift table, make sure to turn off the AC power supply.

■ After service it is necessary to check the function of the lift table again.

■ ONLY a qualified personnel can do service work.

■ Do routine check of the micro-switches on the safety guard.

■ Do routine check of the hydraulic system by listening its noise, touch motor's surface.

■ Caution: It is necessary to turn off the AC power supply before touch motor's surface.

■ Pay attention to clear or even replace the oil filter after operating for a long time.

■ Appropriate lubrication is necessary to make the lift table work easily and have a prolonged service life.

■ Following table is recommended to service the lift table periodically.

Content	After every 500 hours' working or every 3 months later	After every 2000 hours' working or every year
Check oil level of oil tank	☆	
Check the cleanliness of oil filter	☆	
Fasten all the connecting parts again	☆	
Check wear and tear of pressure oil pipes	☆	
Check hydraulic cylinder	☆	
Fix main parts tightly again	☆	
Check the function of micro-switches	☆	
Check whole working state of the lift table	☆	
Lubricate all the joints and pivot points	☆	
Check wear and tear of all axial bushes		☆
Replace hydraulic oil for the first time	Accumulated working ten hours'	
Replace hydraulic oil		☆
Check oil leaking		☆
Remark: *☆ stands for proceeding the item.*		

8. GREASING POINTS

1.Piston rod bearing
2.Lower running wheel
3.Lower arm fixing
4.Arm center
5.Upper arm fixing
6.Upper running wheel

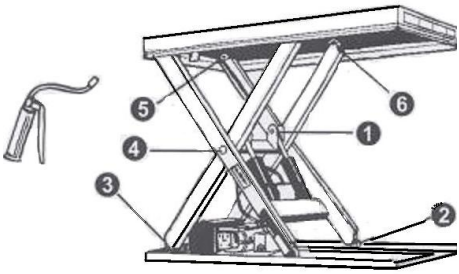

When greasing the bearings the Lift Table must not be loaded!

When determining oil levels, bear in mind that the tank contains the greatest amount when the lift table is in its lowest position.

Hydraulic oil must be treated as dangerous waste!

9. TROUBLE SHOOTING

Note: Before service it is necessary to screw two eyebolts into relevant screw-holes on the basis lest the table lowers accidentally.

Trouble	Cause	Remedy
Table cannot lift while motor works normally	◇ Eyebolt has not been removed ◇ AC voltage phrases mistake ◇ Electromagnetic dysfunctions ◇ The table is overloaded	◇ Remove eyebolt ◇ Correct AC voltage phrase ◇ Check the function of electromagnetic valve and repair it ◇ Remove excessive load
Table cannot lift and motor does not work	◇ Lowering limit switch (if existed) damaged	◇ Replace limit switch
Table cannot lower	◇ Lowering limit switch or micro-switch on safety guard damaged ◇ Electromagnetic valve dysfunctions ◇ Safety guard works ◇ Something wrong with electric circuit board	◇ Replace lowering limit switch or micro-switch. ◇ Check the function of electromagnetic valve and repair it ◇ Strike the UP button slightly ◇ Replace electric circuit board
Table's legs go over limit position (if existed) while table lowers	◇ Internal leaking in electromagnetic valve ◇ Packing damaged in hydraulic cylinder	◇ Repair electromagnetic valve and if necessary replace it ◇ Check and replace packing
Table cannot reach the highest	◇ Oil not enough ◇ Limit switch damaged	◇ Fill enough oil ◇ Check and repair limit switch. If necessary, replace it

position		

10. SPECIFICATIONS

Model		HW500L
Capacity (kg)		500
Collapsed Height (mm)		200
Max. Bearing Height (mm)		1000
Platform Length (mm)		2000
Platform Width (mm)		800
Approx. Lifting Time while Loaded Rated Capacity (Sec)		20～25
Motor	Output (w)	1100
	Voltage (V)	400
	Revolution (r/min)	1400
	Protection Class	IP.54
	Insulation Class	F.
Net Weight (kg)		193

常州市祥瑞液压设备有限公司
CHANGZHOU XIANGRUI HYDRAULIC EQUIPMENT CO.,LTD.